Art.-Number: 701098

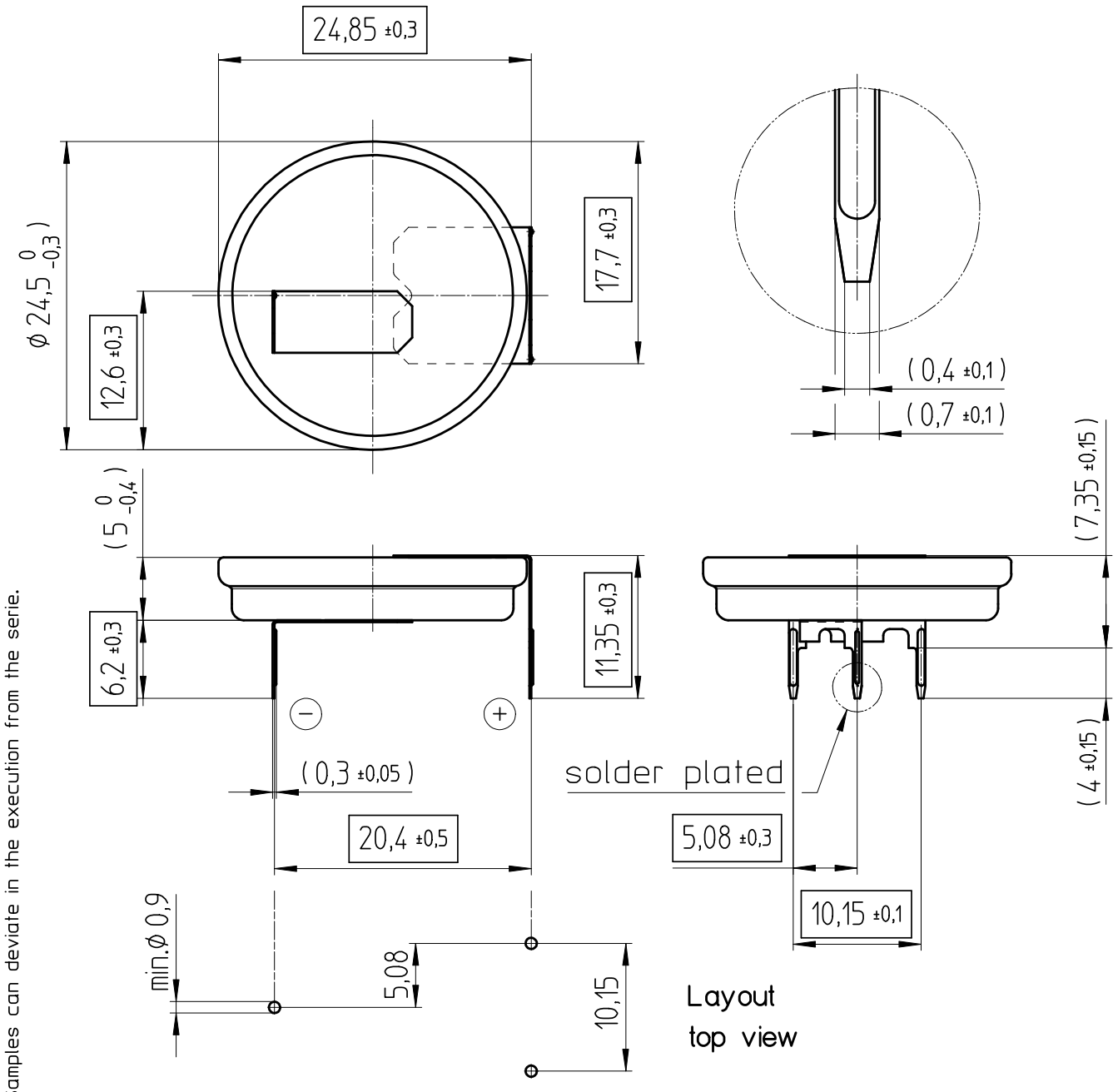

- Samples can deviate in the execution from the serie.

- Dimensions and tolerances can be specified only after the testing of the devices for the mass production definitely

Tab material: Stainless steel

All framed values will be used for dimension checking !

Rev.	○			Rev.	○				Customer's Approval		
Rev.	○			Rev.	○				Date		
Rev.	○			Rev.	○				Signature		
Titel: CR2450NRH1-LF								Scale 2:1	Drawn	05.01.05	SRi
									Checked	07.02.05	MHo
									Approved		

renata batteries

CH-4452 Itingen
Switzerland

3.8736.4-